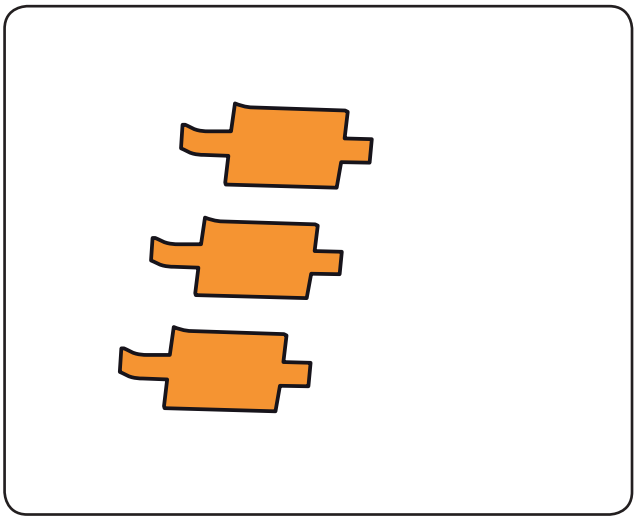

1

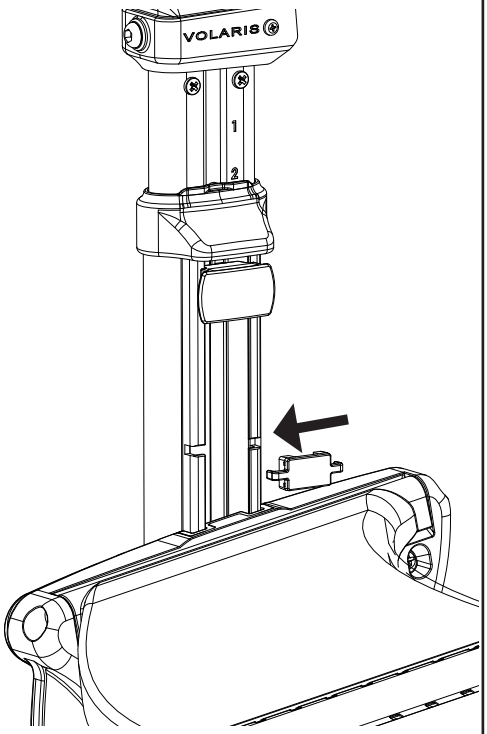

2

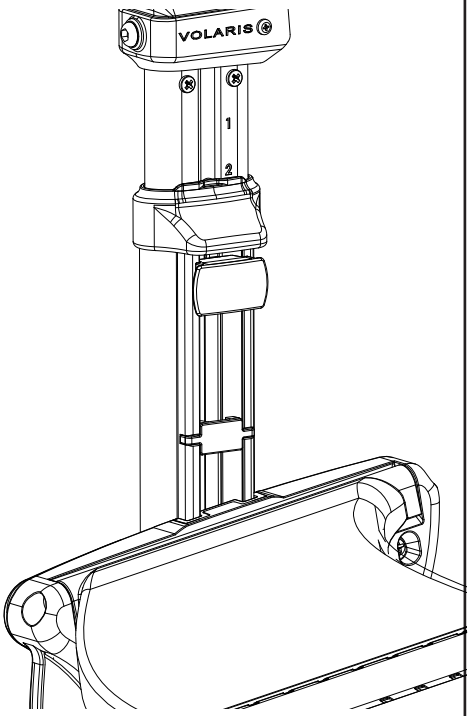

Art no 91-425 1711:5

Eurovema Mobility AB, Baldersvägen 38, 332 35 Gislaved, Sweden, www.eurovema.se, info@eurovema.se, +46 (0)371390100